ACID

A DVANCED
C ONSTRUCTION
I NFORMATION
D EVELOPMENT

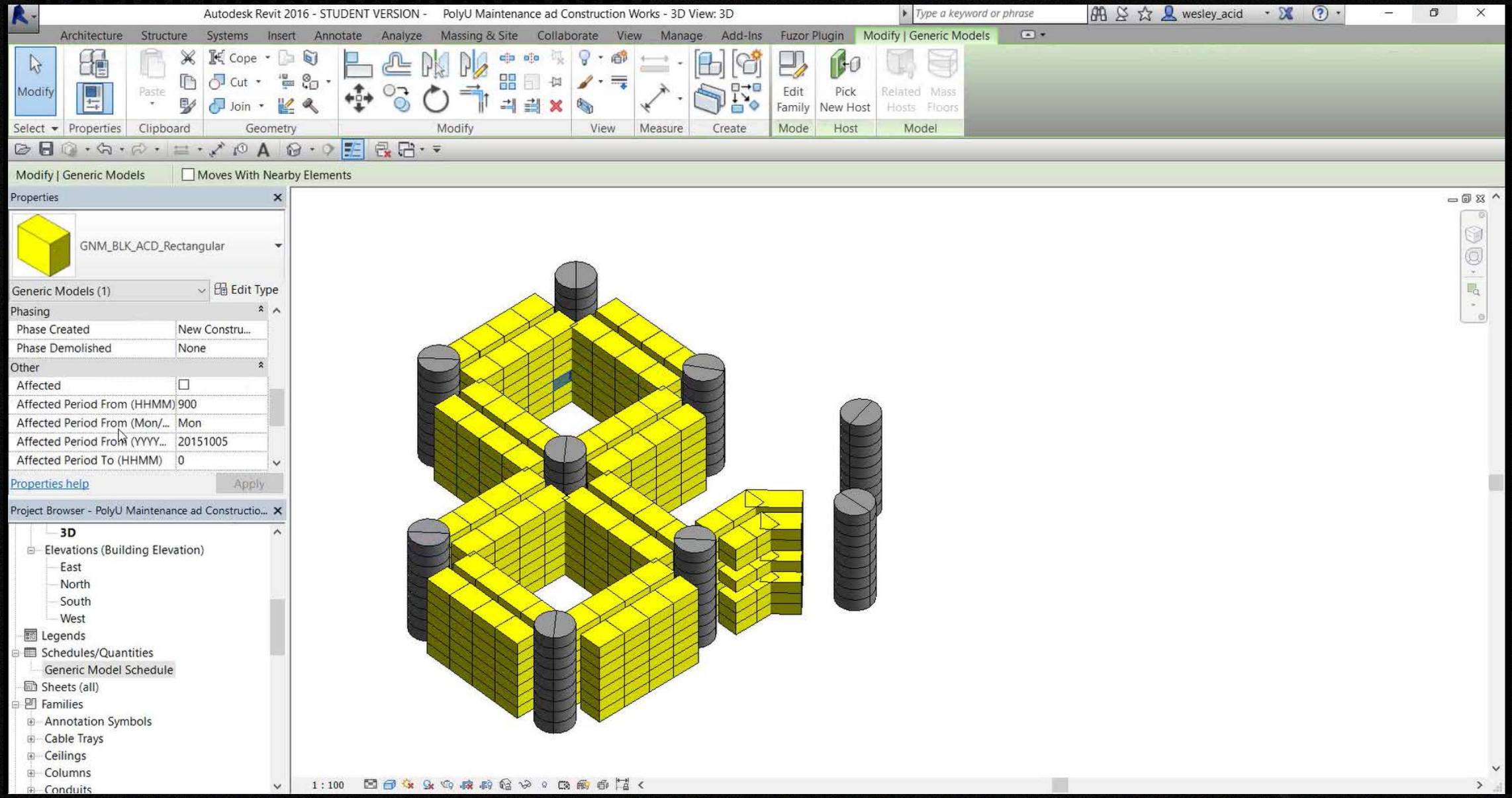

Select the area of construction / defect

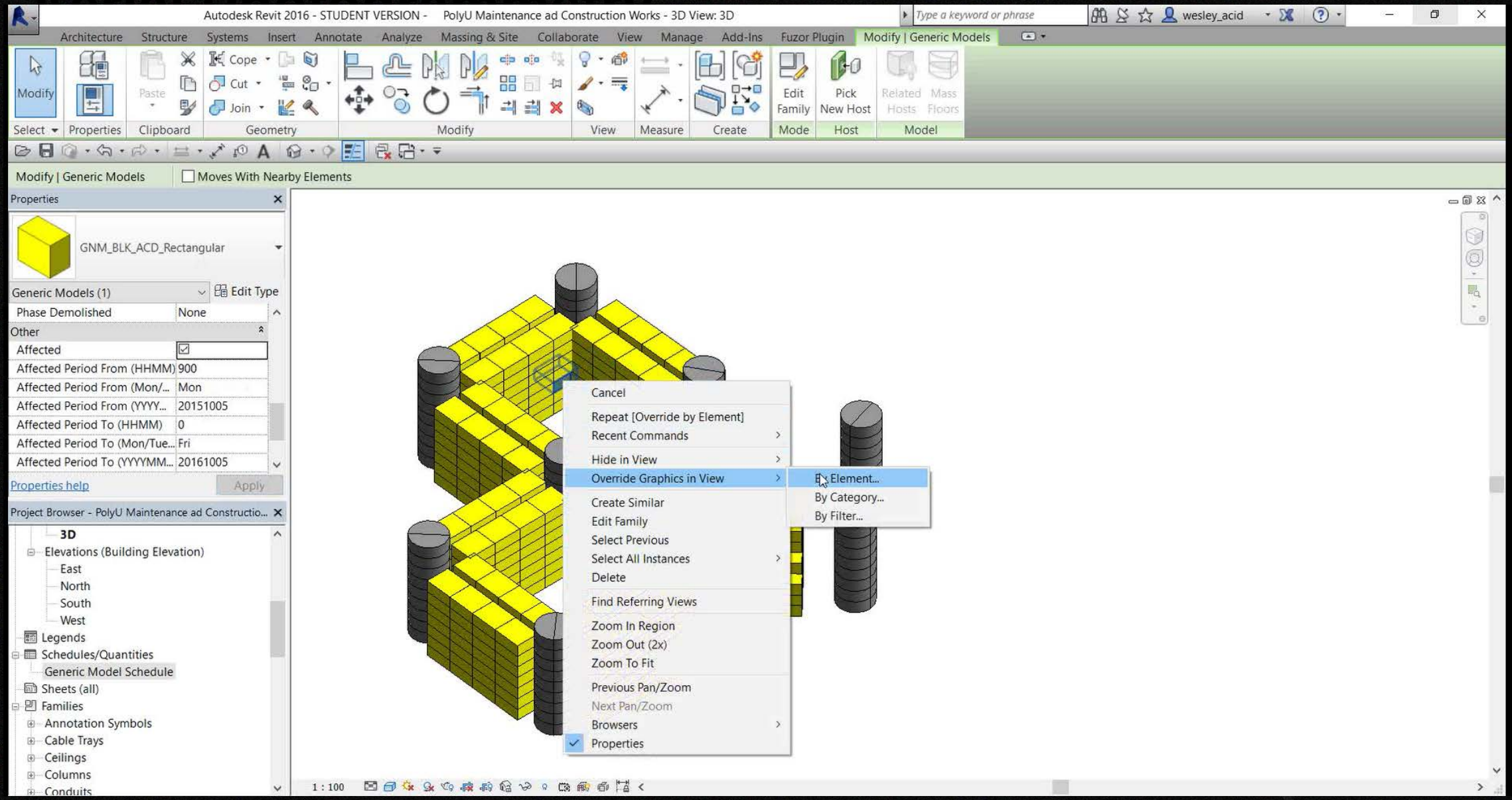

Categorize the area

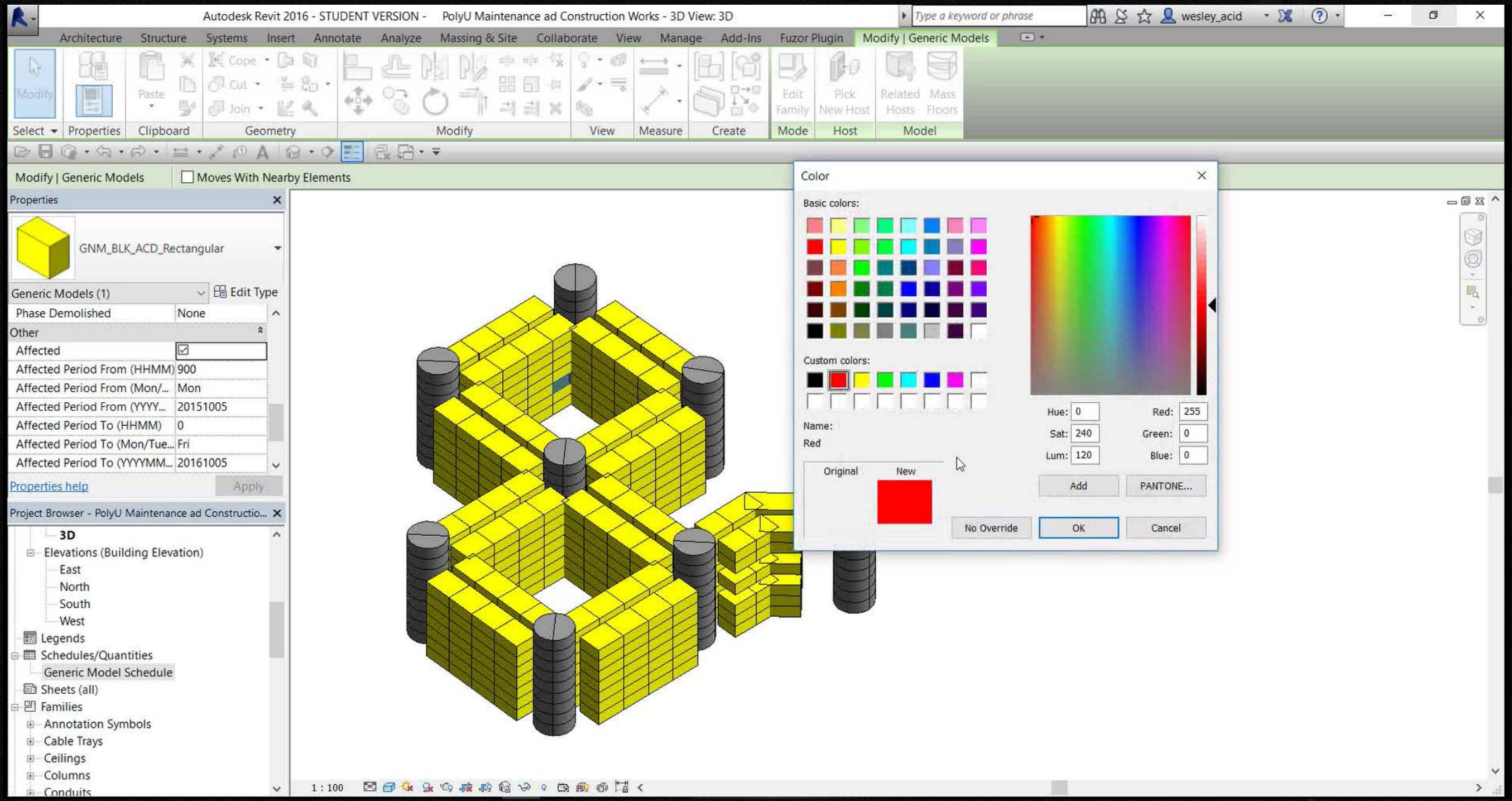

Categorize the area by picking colors

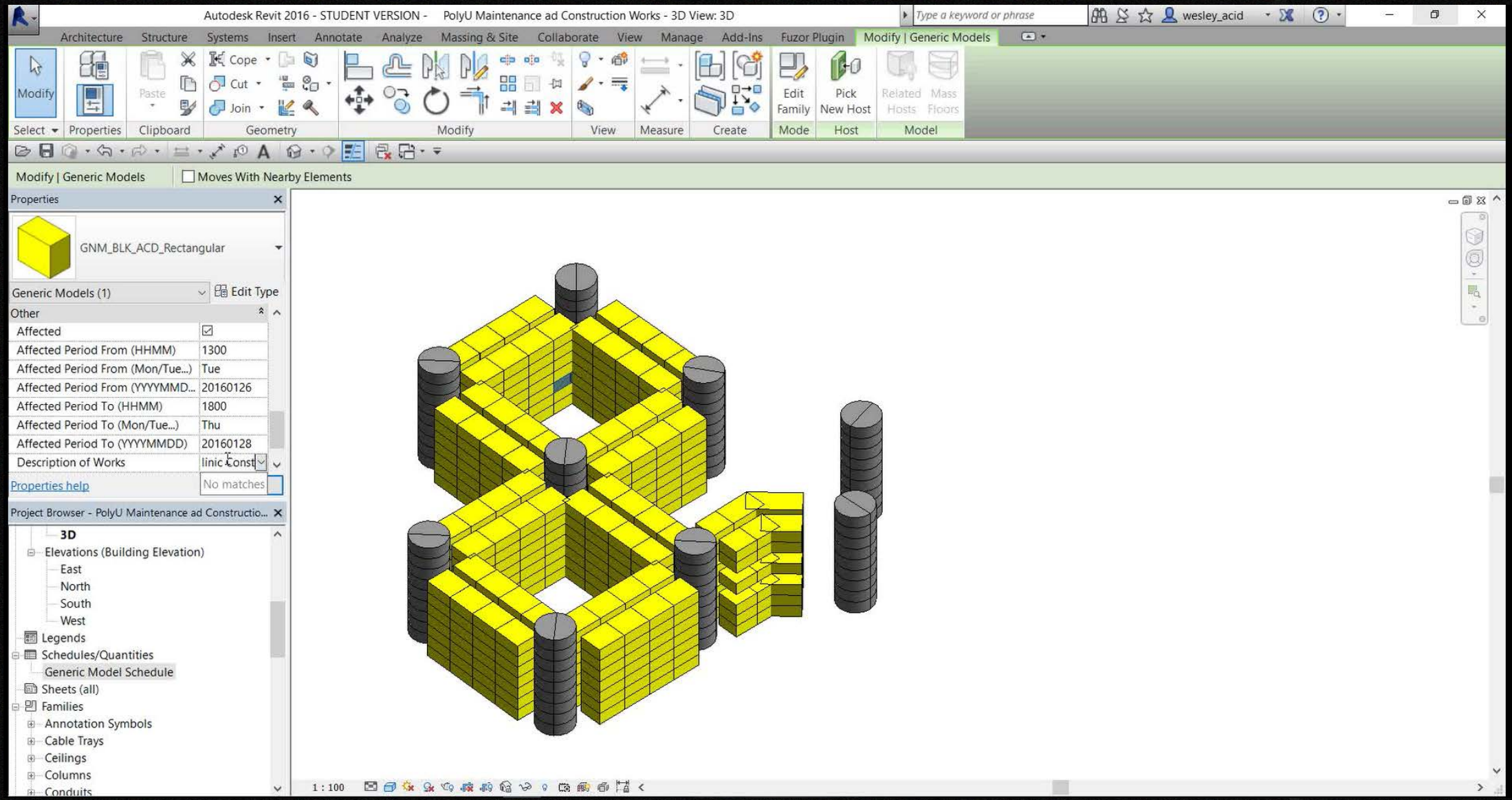

Entering informations of site

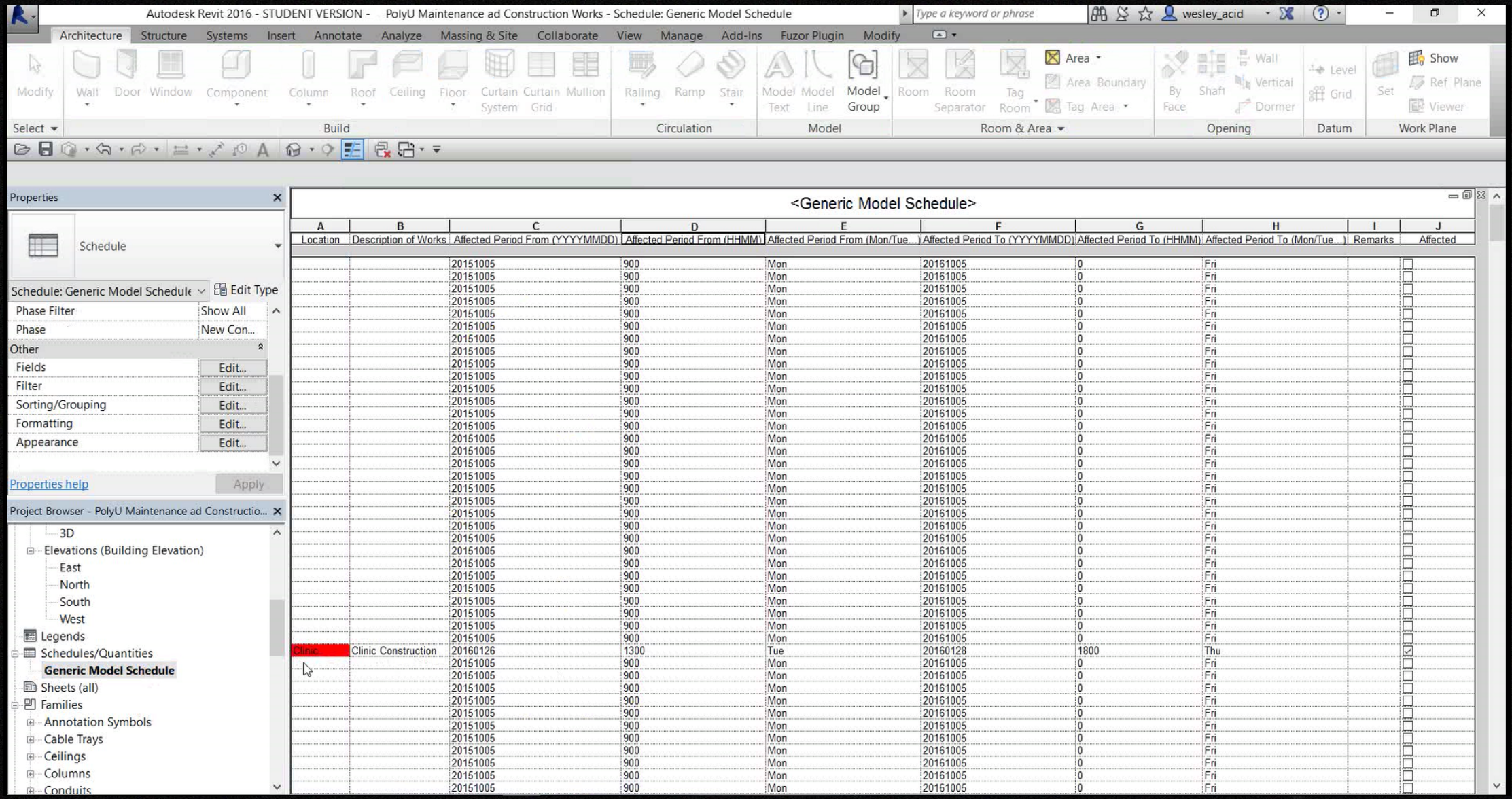

A	B	C	D	E	F	G	H	I	J
Location	Description of Works	Affected Period From (YYYYMMDD)	Affected Period From (HHMM)	Affected Period From (Mon/Tue...)	Affected Period To (YYYYMMDD)	Affected Period To (HHMM)	Affected Period To (Mon/Tue...)	Remarks	Affected
		20151005	900	Mon	20161005	0	Fri		☐
		20151005	900	Mon	20161005	0	Fri		☐
		20151005	900	Mon	20161005	0	Fri		☐
		20151005	900	Mon	20161005	0	Fri		☐
		20151005	900	Mon	20161005	0	Fri		☐
		20151005	900	Mon	20161005	0	Fri		☐
		20151005	900	Mon	20161005	0	Fri		☐
		20151005	900	Mon	20161005	0	Fri		☐
		20151005	900	Mon	20161005	0	Fri		☐
		20151005	900	Mon	20161005	0	Fri		☐
		20151005	900	Mon	20161005	0	Fri		☐
		20151005	900	Mon	20161005	0	Fri		☐
		20151005	900	Mon	20161005	0	Fri		☐
		20151005	900	Mon	20161005	0	Fri		☐
		20151005	900	Mon	20161005	0	Fri		☐
		20151005	900	Mon	20161005	0	Fri		☐
		20151005	900	Mon	20161005	0	Fri		☐
		20151005	900	Mon	20161005	0	Fri		☐
		20151005	900	Mon	20161005	0	Fri		☐
		20151005	900	Mon	20161005	0	Fri		☐
		20151005	900	Mon	20161005	0	Fri		☐
		20151005	900	Mon	20161005	0	Fri		☐
		20151005	900	Mon	20161005	0	Fri		☐
		20151005	900	Mon	20161005	0	Fri		☐
		20151005	900	Mon	20161005	0	Fri		☐
		20151005	900	Mon	20161005	0	Fri		☐
		20151005	900	Mon	20161005	0	Fri		☐
		20151005	900	Mon	20161005	0	Fri		☐
		20151005	900	Mon	20161005	0	Fri		☐
		20151005	900	Mon	20161005	0	Fri		☐
		20151005	900	Mon	20161005	0	Fri		☐
		20151005	900	Mon	20161005	0	Fri		☐
Clinic	Clinic Construction	20160126	1300	Tue	20160128	1800	Thu		☑
		20151005	900	Mon	20161005	0	Fri		☐
		20151005	900	Mon	20161005	0	Fri		☐
		20151005	900	Mon	20161005	0	Fri		☐
		20151005	900	Mon	20161005	0	Fri		☐
		20151005	900	Mon	20161005	0	Fri		☐
		20151005	900	Mon	20161005	0	Fri		☐
		20151005	900	Mon	20161005	0	Fri		☐
		20151005	900	Mon	20161005	0	Fri		☐
		20151005	900	Mon	20161005	0	Fri		☐
		20151005	900	Mon	20161005	0	Fri		☐
		20151005	900	Mon	20161005	0	Fri		☐
		20151005	900	Mon	20161005	0	Fri		☐

Display of information on schedule

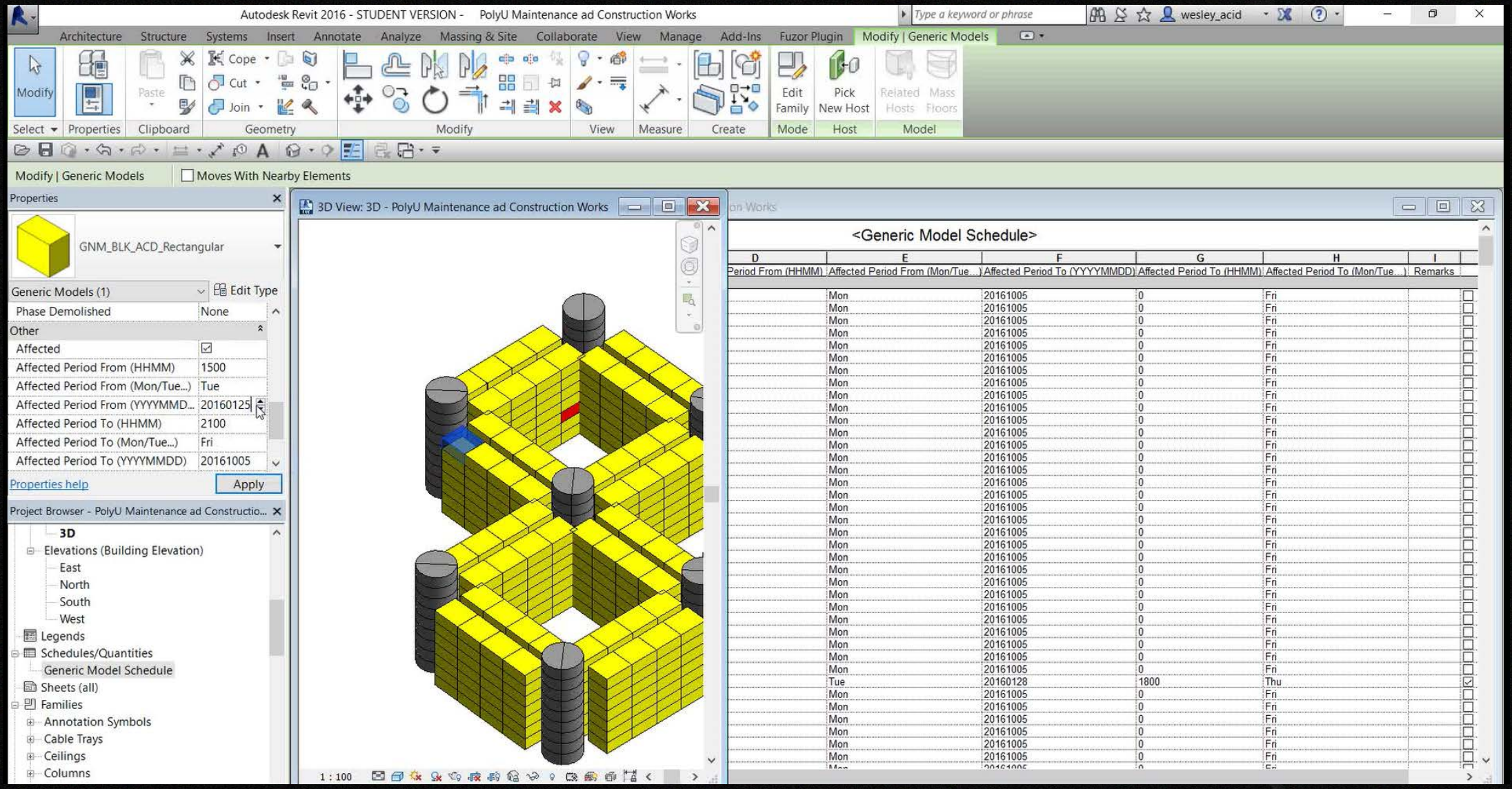
Autodesk Revit 2016 - STUDENT VERSION - PolyU Maintenance ad Construction Works
Modify | Generic Models
Moves With Nearby Elements
Properties
GNM_BLK_ACD_Rectangular
Generic Models (1)
Edit Type
Phase Demolished None
Other
Affected
Affected Period From (HHMM) 1500
Affected Period From (Mon/Tue...) Tue
Affected Period From (YYYYMMD... 20160125
Affected Period To (HHMM) 2100
Affected Period To (Mon/Tue...) Fri
Affected Period To (YYYYMMDD) 20161005
Properties help
Apply
Project Browser - PolyU Maintenance ad Constructio...
3D
Elevations (Building Elevation)
East
North
South
West
Legends
Schedules/Quantities
Generic Model Schedule
Sheets (all)
Families
Annotation Symbols
Cable Trays
Ceilings
Columns
3D View: 3D - PolyU Maintenance ad Construction Works
1 : 100
<Generic Model Schedule>