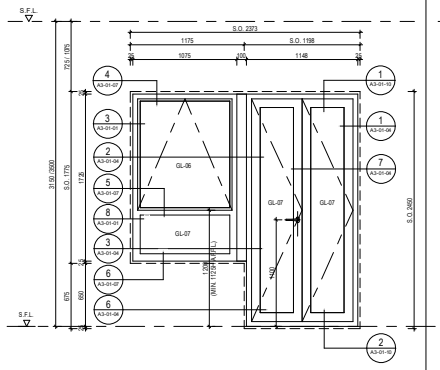

WIT-001 | WIT-001-R

70 MM EXTRUDED ALUMINUM SECTION [AL-03] FOR WINDOW AND SCHUCO ASS70 FD BI-FOLDING DOOR

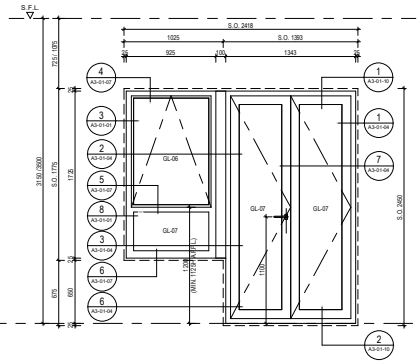

WIT-002 | WIT-002-R

70 MM EXTRUDED ALUMINUM SECTION [AL-03] FOR WINDOW AND SCHUCO ASS70 FD BI-FOLDING DOOR

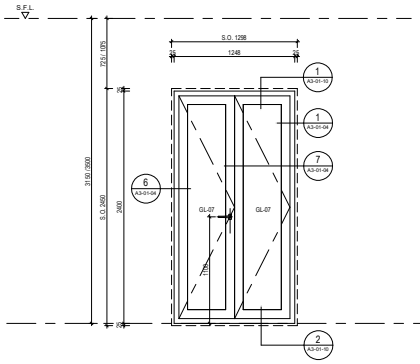

WIT-003 | WIT-003-R

SCHUCO ASS70 FD BI-FOLDING DOOR

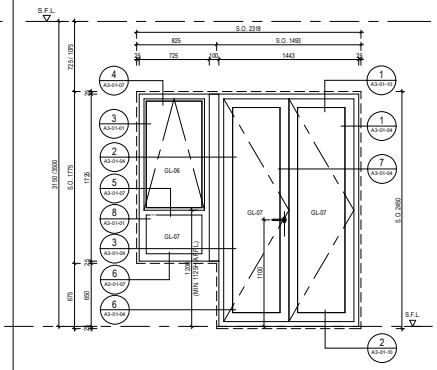

WIT-004 | WIT-004-R

70 MM EXTRUDED ALUMINUM SECTION [AL-03] FOR WINDOW AND SCHUCO ASS70 FD BI-FOLDING DOOR

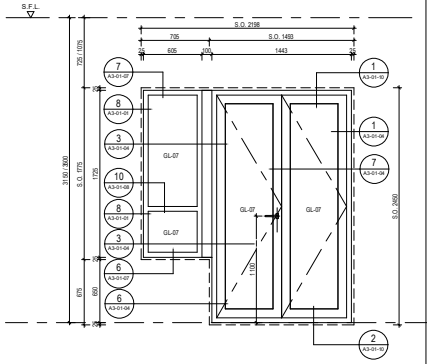

WIT-005 | WIT-005-R

70 MM EXTRUDED ALUMINUM SECTION [AL-03] FOR WINDOW AND SCHUCO ASS70 FD BI-FOLDING DOOR

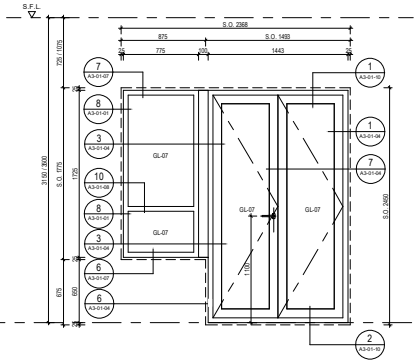

WIT-006 | WIT-006-R

70 MM EXTRUDED ALUMINUM SECTION [AL-03] FOR WINDOW AND SCHUCO ASS70 FD BI-FOLDING DOOR

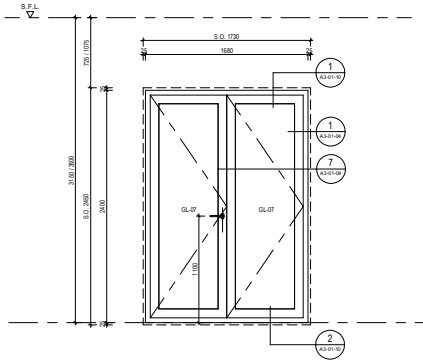

WIT-007 | WIT-007-R

SCHUCO ASS70 FD BI-FOLDING DOOR

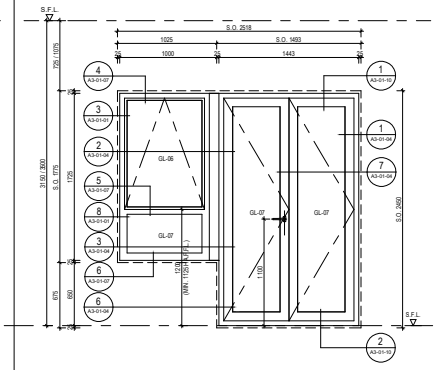

WIT-008 | WIT-008-R

70 MM EXTRUDED ALUMINUM SECTION [AL-03] FOR WINDOW AND SCHUCO ASS70 FD BI-FOLDING DOOR

B.D. REF. : BD 2/9124/14

F.S.D. REF. : FP 8/31008

REVISIONS :

NO.	DESCRIPTION	DATE

NOTES:

1. EXACT DIMENSION SHALL BE VERIFIED ON SITE.
2. TOP HUNG OPERABLE SASH SHALL BE FITTED WITH MULTI POINT LOCK SYSTEM, MIN. 4 LOCKING POINTS, ONE PAIR OF STAINLESS STEEL FOUR BAR HINGE AND ONE PAIR OF DETACHABLE OPENING LIMITING DEVICE.
3. SIDE HUNG OPERABLE SASH SHALL BE FITTED WITH MULTI-POINT LOCK SYSTEM AND MIN. 3 LOCKING POINTS, CONCEALED KEEPERS AND ONE PAIR OF STAINLESS STEEL FOUR BAR HINGE.
4. SIDE HUNG FRENCH DOOR SHALL BE FITTED WITH MULTI POINT LOCK SYSTEM, MIN. 3 LOCKING POINTS & CONCEALED KEEPERS, KEYS, MIN. 3NOS. ALUMINUM HINGES, DOOR CATCH AND S.S. OVERHEAD FRICTION LIMITER AT TOP.
5. SLIDING DOOR SHALL BE FITTED WITH SCHUCO ASS80 OR APPROVED EQUIVALENT LIFT AND SLIDE DOOR SYSTEM WITH SCHUCO ASS50 OR APPROVED EQUIVALENT IRONMONGERY W/ MIN. 6 LOCKING POINT, KEYS AND DOOR STOPPER.
6. BI-FOLDING DOOR SHALL BE FITTED WITH SCHUCO ASS70FD OR APPROVED EQUIVALENT BI-FOLDING DOOR SYSTEM WITH SCHUCO ASS70FD OR APPROVED EQUIVALENT IRONMONGERY.
7. ALUMINUM LOUVRE SHALL BE FITTED WITH 3MM THK. ALUMINUM BACK PANEL W/ COLOR MATCHING LOUVRE BLADE.
8. INTERNAL FINISHES REFER TO INTERIOR DESIGNER'S DRAWINGS.
9. GLASS TYPE AND THICKNESS REFER TO WINDOW SCHEDULE.

LEGEND:

GL-XX MATERIAL CODE REFER DRAWING NO. A2-01-01

SIDE HUNG OPERABLE SASH

TOP HUNG OPERABLE SASH

WIT-XXX-R TO BE HANDED OF WIT-XXX

TENDER DRAWING

DRAWING TITLE :

TOWER WINDOW SCHEDULE (1)

DATE : 28.2.2018	PAPER SIZE : A1
SCALE : 1:25	DRAWN :
PROJECT NO. :	
DWG. NO. :	

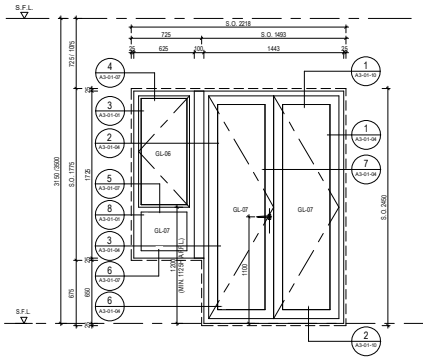

WIT-009 | WIT-009-R

70 MM EXTRUDED ALUMINIUM SECTION | AL-03 | FOR WINDOW AND SCHUCO ASS70 FD BI-FOLDING DOOR

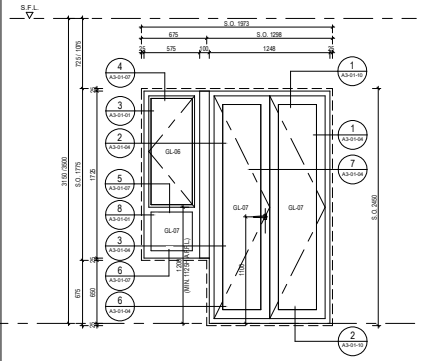

WIT-010 | WIT-010-R

70 MM EXTRUDED ALUMINIUM SECTION | AL-03 | FOR WINDOW AND SCHUCO ASS70 FD BI-FOLDING DOOR

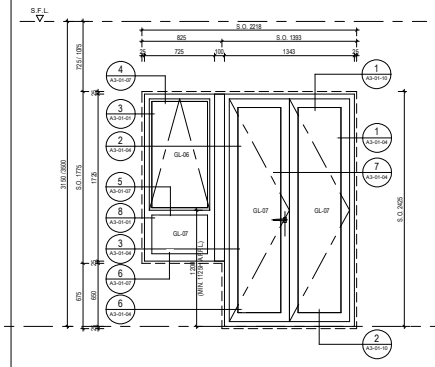

WIT-011 | WIT-011-R

70 MM EXTRUDED ALUMINIUM SECTION | AL-03 | FOR WINDOW AND SCHUCO ASS70 FD BI-FOLDING DOOR

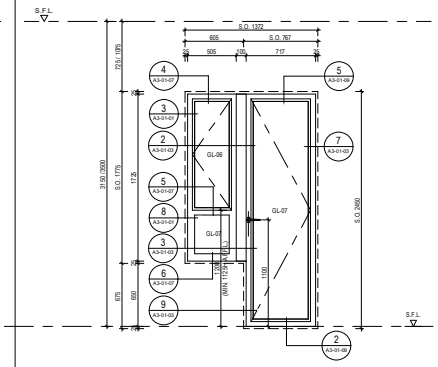

WIT-012 | WIT-012-R

70 MM EXTRUDED ALUMINIUM SECTION | AL-03 | FOR WINDOW AND FRENCH DOOR

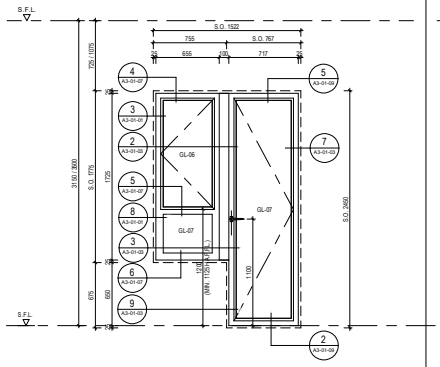

WIT-013 | WIT-013-R

70 MM EXTRUDED ALUMINIUM SECTION | AL-03 | FOR WINDOW AND FRENCH DOOR

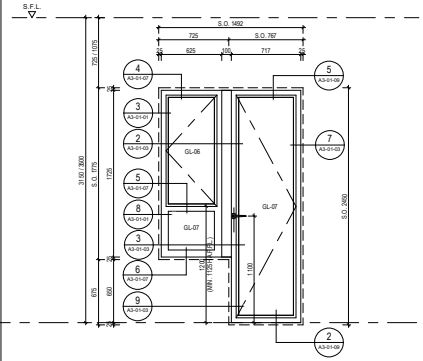

WIT-014 | WIT-014-R

70 MM EXTRUDED ALUMINIUM SECTION | AL-03 | FOR WINDOW AND FRENCH DOOR

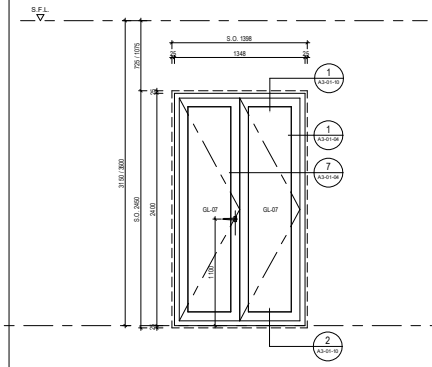

WIT-015 | WIT-015-R

SCHUCO ASS70 FD BI-FOLDING DOOR

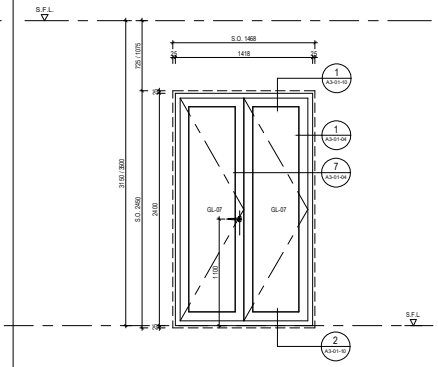

WIT-016 | WIT-016-R

SCHUCO ASS70 FD BI-FOLDING DOOR

B.D. REF. : BD 2/9124/14

F.S.D. REF. : FP 8/31008

REVISIONS :

NO.	DESCRIPTION	DATE

NOTES:

1. EXACT DIMENSION SHALL BE VERIFIED ON SITE.
2. TOP HUNG OPERABLE SASH SHALL BE FITTED WITH MULTI POINT LOCK SYSTEM, MIN. 4 LOCKING POINTS, ONE PAIR OF STAINLESS STEEL FOUR BAR HINGE AND ONE PAIR OF DETACHABLE OPENING LIMITING DEVICE.
3. SIDE HUNG OPERABLE SASH SHALL BE FITTED WITH MULTI-POINT LOCK SYSTEM AND MIN. 3 LOCKING POINTS, CONCEALED KEEPERS AND ONE PAIR OF STAINLESS STEEL FOUR BAR HINGE.
4. SIDE HUNG FRENCH DOOR SHALL BE FITTED WITH MULTI POINT LOCK SYSTEM, MIN. 3 LOCKING POINTS & CONCEALED KEEPERS, KEYS, MIN. 3NOS. ALUMINUM HINGES, DOOR CATCH AND S.S. OVERHEAD FRICTION LIMITER AT TOP.
5. SLIDING DOOR SHALL BE FITTED WITH SCHUCO ASS80 OR APPROVED EQUIVALENT LIFT AND SLIDE DOOR SYSTEM WITH SCHUCO ASS50 OR APPROVED EQUIVALENT IRONMONGERY W/ MIN. 6 LOCKING POINT, KEYS AND DOOR STOPPER.
6. BI-FOLDING DOOR SHALL BE FITTED WITH SCHUCO ASS70FD OR APPROVED EQUIVALENT BI-FOLDING DOOR SYSTEM WITH SCHUCO ASS70FD OR APPROVED EQUIVALENT IRONMONGERY.
7. ALUMINUM LOUVRE SHALL BE FITTED WITH 3MM THK. ALUMINUM BACK PANEL W/ COLOR MATCHING LOUVRE BLADE.
8. INTERNAL FINISHES REFER TO INTERIOR DESIGNER'S DRAWINGS.
9. GLASS TYPE AND THICKNESS REFER TO WINDOW SCHEDULE.

LEGEND:

GL-XX — MATERIAL CODE REFER DRAWING NO. A2-01-01

SIDE HUNG OPERABLE SASH

TOP HUNG OPERABLE SASH

WIT-XXX-R — TO BE HANDED OF — WIT-XXX

TENDER DRAWING

DRAWING TITLE :

TOWER WINDOW SCHEDULE (2)

DATE : 28.2.2018	PAPER SIZE : A1
SCALE : 1:25	DRAWN :
PROJECT NO. :	
DWG. NO. :	

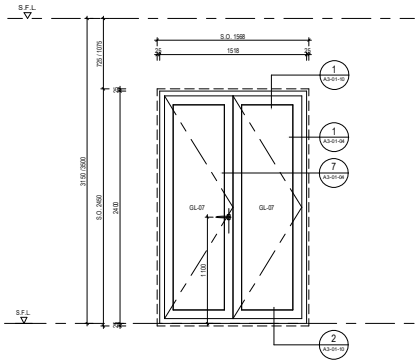

WIT-017 | WIT-017-R

SCHUCO AS570 FD BI-FOLDING DOOR

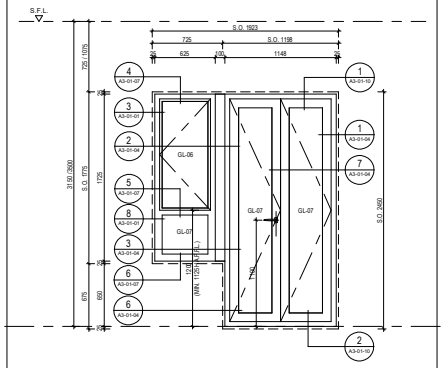

WIT-018 | WIT-018-R

70 MM EXTRUDED ALUMINUM SECTION [AL-03] FOR WINDOW AND SCHUCO AS570 FD BI-FOLDING DOOR

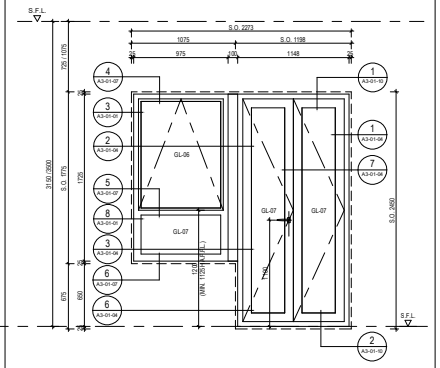

WIT-019 | WIT-019-R

70 MM EXTRUDED ALUMINUM SECTION [AL-03] FOR WINDOW AND SCHUCO AS570 FD BI-FOLDING DOOR

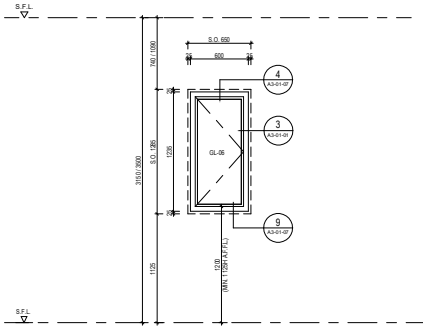

WIT-101 | WIT-101-R

70 MM EXTRUDED ALUMINUM SECTION [AL-03] FOR WINDOW

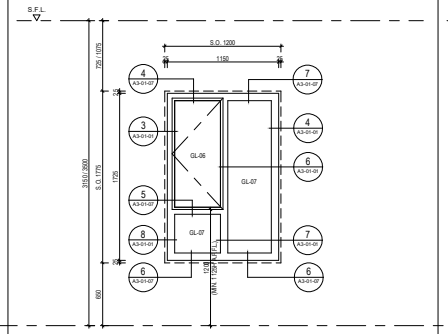

WIT-301 | WIT-301-R

70 MM EXTRUDED ALUMINUM SECTION [AL-03] FOR WINDOW

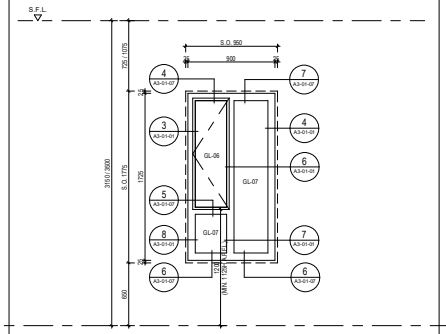

WIT-302 | WIT-302-R

70 MM EXTRUDED ALUMINUM SECTION [AL-03] FOR WINDOW

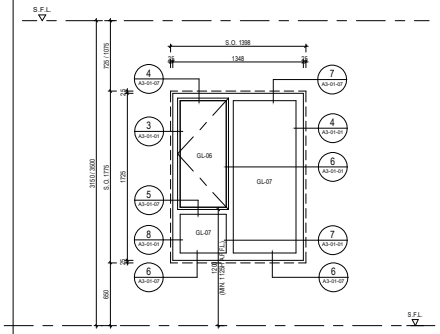

WIT-303 | WIT-303-R

70 MM EXTRUDED ALUMINUM SECTION [AL-03] FOR WINDOW

B.D. REF. : BD 2/9124/14

F.S.D. REF. : FP 8/31008

REVISIONS :

NO.	DESCRIPTION	DATE

NOTES:

1. EXACT DIMENSION SHALL BE VERIFIED ON SITE.
2. TOP HUNG OPERABLE SASH SHALL BE FITTED WITH MULTI POINT LOCK SYSTEM, M/N. 4 LOCKING POINTS, ONE PAIR OF STAINLESS STEEL FOUR BAR HINGE AND ONE PAIR OF DETACHABLE OPENING LIMITING DEVICE.
3. SIDE HUNG OPERABLE SASH SHALL BE FITTED WITH MULTI-POINT LOCK SYSTEM AND M/N. 3 LOCKING POINTS, CONCEALED KEEPERS AND ONE PAIR OF STAINLESS STEEL FOUR BAR HINGE.
4. SIDE HUNG FRENCH DOOR SHALL BE FITTED WITH MULTI POINT LOCK SYSTEM, M/N. 3 LOCKING POINTS & CONCEALED KEEPERS, KEYS, M/N. 3NOS. ALUMINUM HINGES, DOOR CATCH AND S.S. OVERHEAD FRICTION LIMITER AT TOP.
5. SLIDING DOOR SHALL BE FITTED WITH SCHUCO ASS80 OR APPROVED EQUIVALENT LIFT AND SLIDE DOOR SYSTEM WITH SCHUCO ASS50 OR APPROVED EQUIVALENT IRONMONGERY W/ M/N. 6 LOCKING POINT, KEYS AND DOOR STOPPER.
6. BI-FOLDING DOOR SHALL BE FITTED WITH SCHUCO AS570FD OR APPROVED EQUIVALENT BI-FOLDING DOOR SYSTEM WITH SCHUCO AS570FD OR APPROVED EQUIVALENT IRONMONGERY.
7. ALUMINUM LOUVRE SHALL BE FITTED WITH 3MM THK. ALUMINUM BACK PANEL W/ COLOR MATCHING LOUVRE BLADE.
8. INTERNAL FINISHES REFER TO INTERIOR DESIGNER'S DRAWINGS.
9. GLASS TYPE AND THICKNESS REFER TO WINDOW SCHEDULE.

LEGEND:

GL-XX — MATERIAL CODE REFER DRAWING NO. A2-01-01

SIDE HUNG OPERABLE SASH

TOP HUNG OPERABLE SASH

WIT-XXX-R — TO BE HANDED OF — WIT-XXX

TENDER DRAWING

DRAWING TITLE :

TOWER WINDOW SCHEDULE (3)

DATE : 28.2.2018	PAPER SIZE : A1
SCALE : 1:25	DRAWN :
PROJECT NO. :	
DWG. NO. :	

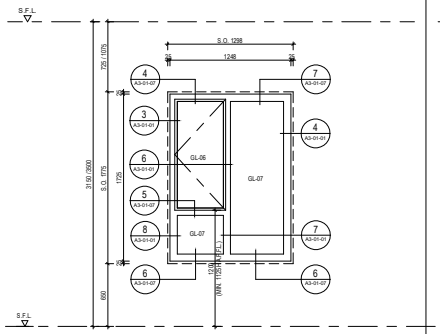

WIT-304 WIT-304-R

70 MM EXTRUDED ALUMINIUM SECTION [AL-03] FOR WINDOW

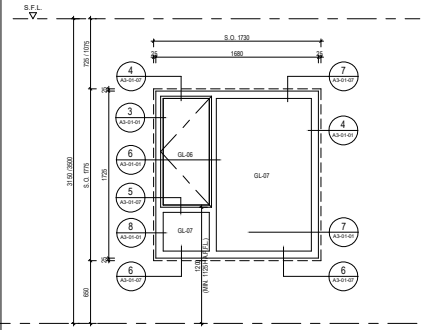

WIT-305 WIT-305-R

70 MM EXTRUDED ALUMINIUM SECTION [AL-03] FOR WINDOW

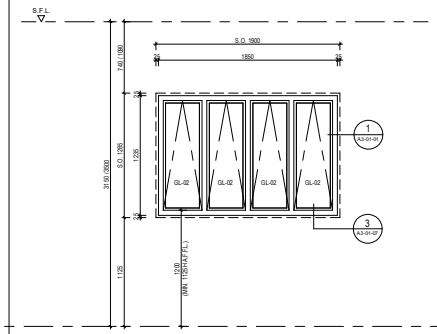

WIT-401 WIT-401-R

45 MM EXTRUDED ALUMINIUM SECTION [AL-03] FOR WINDOW

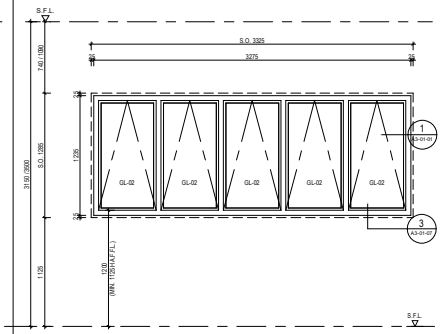

WIT-501 WIT-501-R

45 MM EXTRUDED ALUMINIUM SECTION [AL-03] FOR WINDOW

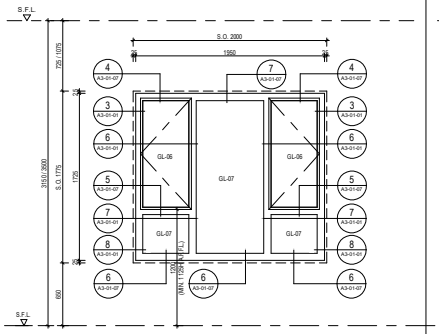

WIT-502 WIT-502-R

70 MM EXTRUDED ALUMINIUM SECTION [AL-03] FOR WINDOW

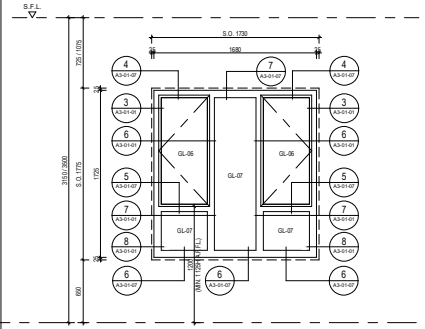

WIT-503 WIT-503-R

70 MM EXTRUDED ALUMINIUM SECTION [AL-03] FOR WINDOW

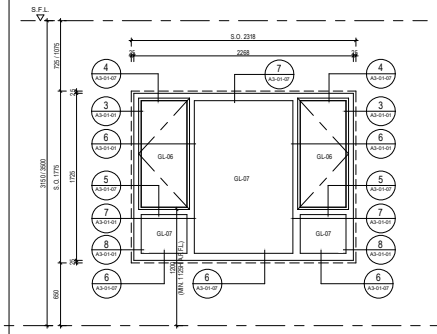

WIT-504 WIT-504-R

70 MM EXTRUDED ALUMINIUM SECTION [AL-03] FOR WINDOW

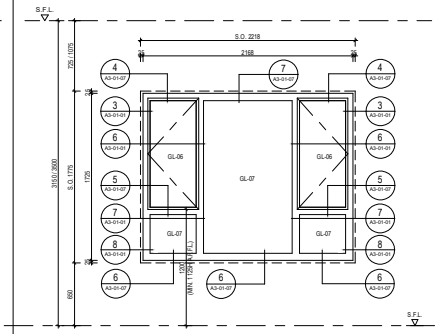

WIT-505 WIT-505-R

70 MM EXTRUDED ALUMINIUM SECTION [AL-03] FOR WINDOW

B.D. REF. : BD 2/9124/14

F.S.D. REF. : FP 8/31008

REVISIONS :

NO.	DESCRIPTION	DATE

NOTES:

1. EXACT DIMENSION SHALL BE VERIFIED ON SITE.
2. TOP HUNG OPERABLE SASH SHALL BE FITTED WITH MULTI POINT LOCK SYSTEM, MIN. 4 LOCKING POINTS, ONE PAIR OF STAINLESS STEEL FOUR BAR HINGE AND ONE PAIR OF DETACHABLE OPENING LIMITING DEVICE.
3. SIDE HUNG OPERABLE SASH SHALL BE FITTED WITH MULTI-POINT LOCK SYSTEM AND MIN. 3 LOCKING POINTS, CONCEALED KEEPERS AND ONE PAIR OF STAINLESS STEEL FOUR BAR HINGE.
4. SIDE HUNG FRENCH DOOR SHALL BE FITTED WITH MULTI POINT LOCK SYSTEM, MIN. 3 LOCKING POINTS & CONCEALED KEEPERS, KEYS, MIN. 3NOS. ALUMINIUM HINGES, DOOR CATCH AND S.S. OVERHEAD FRICTION LIMITER AT TOP.
5. SLIDING DOOR SHALL BE FITTED WITH SCHUCO ASS80 OR APPROVED EQUIVALENT LIFT AND SLIDE DOOR SYSTEM WITH SCHUCO ASS50 OR APPROVED EQUIVALENT IRONMONGERY W/ MIN. 6 LOCKING POINT, KEYS AND DOOR STOPPER.
6. BI-FOLDING DOOR SHALL BE FITTED WITH SCHUCO ASS70FD OR APPROVED EQUIVALENT BI-FOLDING DOOR SYSTEM WITH SCHUCO ASS70FD OR APPROVED EQUIVALENT IRONMONGERY.
7. ALUMINIUM LOUVRE SHALL BE FITTED WITH 3MM THK. ALUMINIUM BACK PANEL W/ COLOR MATCHING LOUVRE BLADE.
8. INTERNAL FINISHES REFER TO INTERIOR DESIGNER'S DRAWINGS.
9. GLASS TYPE AND THICKNESS REFER TO WINDOW SCHEDULE.

LEGEND:

GL-XX MATERIAL CODE REFER DRAWING NO. A2-01-01

SIDE HUNG OPERABLE SASH

TOP HUNG OPERABLE SASH

WIT-XXX-R TO BE HANDED OF WIT-XXX

TENDER DRAWING

DRAWING TITLE :

TOWER WINDOW SCHEDULE (4)

DATE : 28.2.2018	PAPER SIZE : A1
SCALE : 1:25	DRAWN :
PROJECT NO. :	
DWG. NO. :	

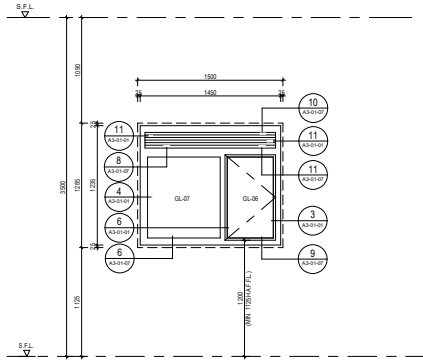

WIT-L-201 WIT-L-201-R

70 MM EXTRUDED ALUMINUM SECTION [AL-03] FOR WINDOW AND LOUVRE

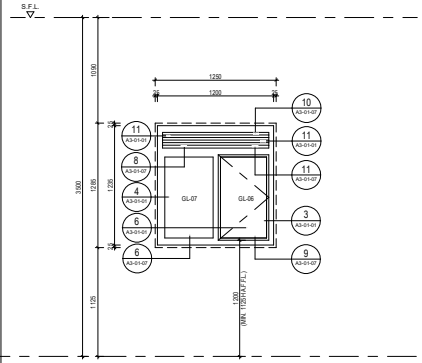

WIT-L-202 WIT-L-202-R

70 MM EXTRUDED ALUMINUM SECTION [AL-03] FOR WINDOW AND LOUVRE

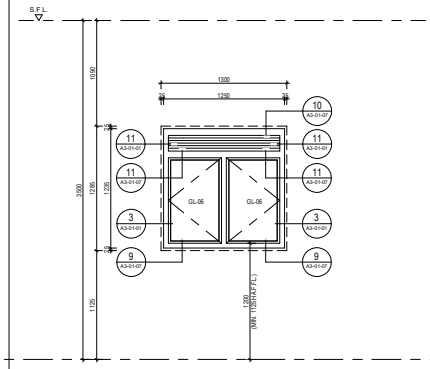

WIT-L-203 WIT-L-203-R

70 MM EXTRUDED ALUMINUM SECTION [AL-03] FOR WINDOW AND LOUVRE

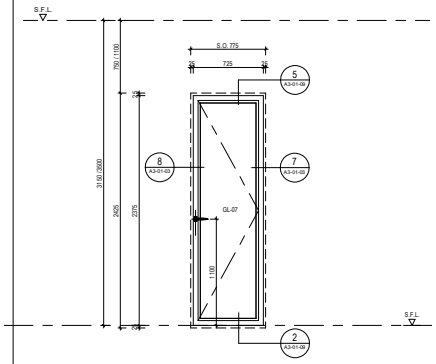

WIT-F-001 WIT-F-001-R

70 MM EXTRUDED ALUMINUM SECTION [AL-03] FOR FRENCH DOOR

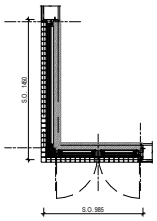

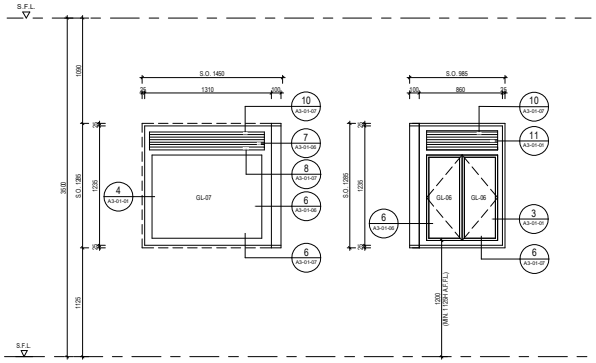

WIT-CL-301 WIT-CL-301-R

70 MM EXTRUDED ALUMINUM SECTION [AL-03] FOR WINDOW AND LOUVRE

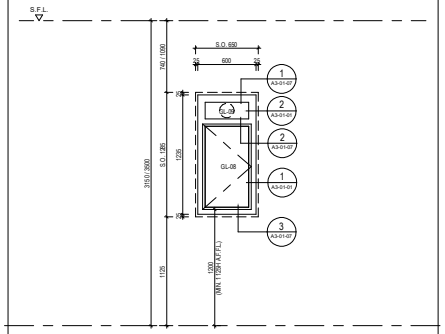

WIT-B-201 WIT-B-201-R

45 MM EXTRUDED ALUMINUM SECTION [AL-03] FOR WINDOW

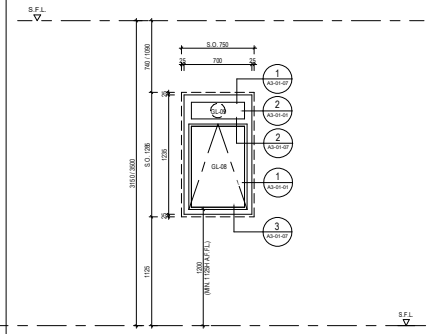

WIT-B-202 WIT-B-202-R

45 MM EXTRUDED ALUMINUM SECTION [AL-03] FOR WINDOW

B.D. REF. : BD 2/9124/14

F.S.D. REF. : FP 8/31008

REVISIONS :

NO.	DESCRIPTION	DATE

NOTES:

1. EXACT DIMENSION SHALL BE VERFIED ON SITE.
2. TOP HUNG OPERABLE SASH SHALL BE FITTED WITH MULTI POINT LOCK SYSTEM, M/N. 4 LOCKING POINTS, ONE PAIR OF STAINLESS STEEL FOUR BAR HINGE AND ONE PAIR OF DETACHABLE OPENING LIMITING DEVICE.
3. SIDE HUNG OPERABLE SASH SHALL BE FITTED WITH MULTI-POINT LOCK SYSTEM AND M/N. 3 LOCKING POINTS, CONCEALED KEEPERS AND ONE PAIR OF STAINLESS STEEL FOUR BAR HINGE.
4. SIDE HUNG FRENCH DOOR SHALL BE FITTED WITH MULTI POINT LOCK SYSTEM, M/N. 3 LOCKING POINTS & CONCEALED KEEPERS, KEYS, M/N. 3NOS. ALUMINUM HINGES, DOOR CATCH AND S.S. OVERHEAD FRICTION LIMITER AT TOP.
5. SLIDING DOOR SHALL BE FITTED WITH SCHUCO ASS50 OR APPROVED EQUIVALENT LIFT AND SLIDE DOOR SYSTEM WITH SCHUCO ASS50 OR APPROVED EQUIVALENT IRONMONGERY W/ M/N. 5 LOCKING POINT, KEYS AND DOOR STOPPER.
6. BI-FOLDING DOOR SHALL BE FITTED WITH SCHUCO ASS70FD OR APPROVED EQUIVALENT BI-FOLDING DOOR SYSTEM WITH SCHUCO ASS70FD OR APPROVED EQUIVALENT IRONMONGERY.
7. ALUMINUM LOUVRE SHALL BE FITTED WITH 3MM THK. ALUMINUM BACK PANEL W/ COLOR MATCHING LOUVRE BLADE.
8. INTERNAL FINISHES REFER TO INTERIOR DESIGNER'S DRAWINGS.
9. GLASS TYPE AND THICKNESS REFER TO WINDOW SCHEDULE.

LEGEND:

GL-XX MATERIAL CODE REFER DRAWING NO. A2-01-01

SIDE HUNG OPERABLE SASH

TOP HUNG OPERABLE SASH

WIT-XXX-R TO BE HANDED OF WIT-XXX

TENDER DRAWING

DRAWING TITLE :

TOWER WINDOW SCHEDULE (5)

DATE : 28.2.2018	PAPER SIZE : A1
SCALE : 1:25	DRAWN :
PROJECT NO. :	
DWG. NO. :	

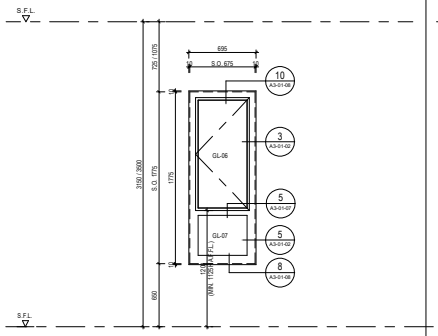

WPT-201 WPT-201-R

70 MM EXTRUDED ALUMINIUM SECTION [AL-03] FOR WINDOW

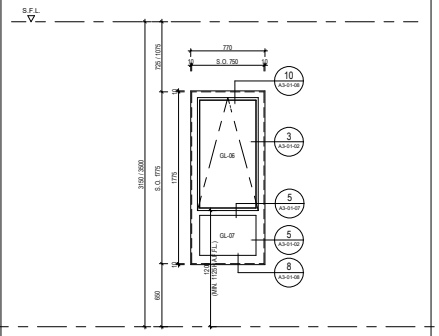

WPT-202 WPT-202-R

70 MM EXTRUDED ALUMINIUM SECTION [AL-03] FOR WINDOW

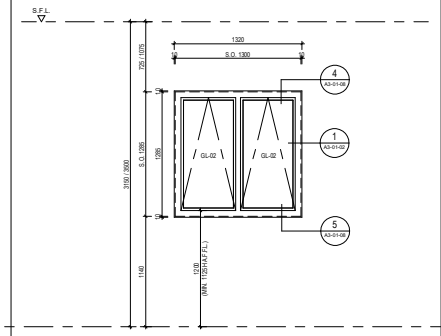

WPT-203 WPT-203-R

45 MM EXTRUDED ALUMINIUM SECTION [AL-03] FOR WINDOW

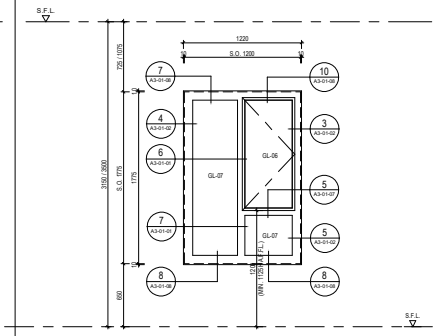

WPT-301 WPT-301-R

70 MM EXTRUDED ALUMINIUM SECTION [AL-03] FOR WINDOW

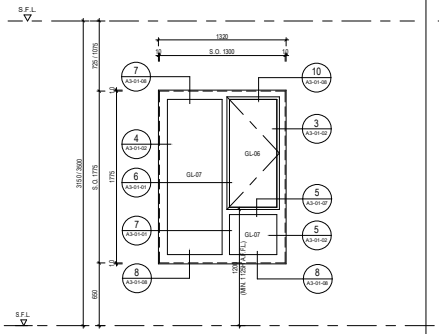

WPT-302 WPT-302-R

70 MM EXTRUDED ALUMINIUM SECTION [AL-03] FOR WINDOW

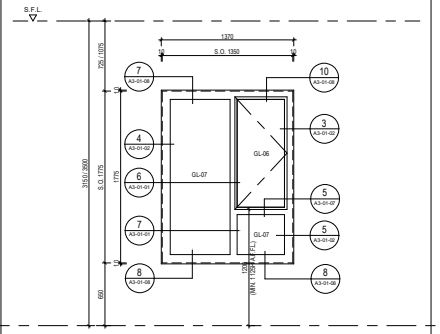

WPT-303 WPT-303-R

70 MM EXTRUDED ALUMINIUM SECTION [AL-03] FOR WINDOW

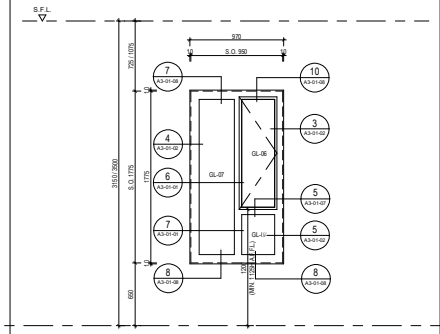

WPT-304 WPT-304-R

70 MM EXTRUDED ALUMINIUM SECTION [AL-03] FOR WINDOW

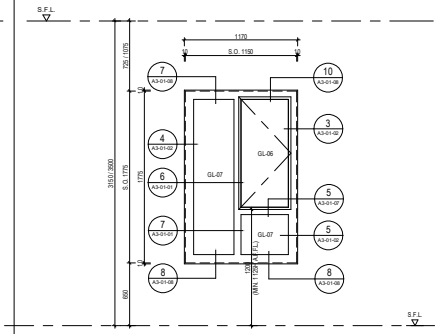

WPT-305 WPT-305-R

70 MM EXTRUDED ALUMINIUM SECTION [AL-03] FOR WINDOW

B.D. REF. : BD 2/9124/14

F.S.D. REF. : FP 8/31008

REVISIONS :

NO.	DESCRIPTION	DATE

NOTES:

1. EXACT DIMENSION SHALL BE VERIFIED ON SITE.
2. TOP HUNG OPERABLE SASH SHALL BE FITTED WITH MULTI POINT LOCK SYSTEM, M/N. 4 LOCKING POINTS, ONE PAIR OF STAINLESS STEEL FOUR BAR HINGE AND ONE PAIR OF DETACHABLE OPENING LIMITING DEVICE.
3. SIDE HUNG OPERABLE SASH SHALL BE FITTED WITH MULTI-POINT LOCK SYSTEM AND M/N. 3 LOCKING POINTS, CONCEALED KEEPERS AND ONE PAIR OF STAINLESS STEEL FOUR BAR HINGE.
4. SIDE HUNG FRENCH DOOR SHALL BE FITTED WITH MULTI POINT LOCK SYSTEM, M/N. 3 LOCKING POINTS & CONCEALED KEEPERS, KEYS, M/N. 3NOS. ALUMINUM HINGES, DOOR CATCH AND S.S. OVERHEAD FRICTION LIMITER AT TOP.
5. SLIDING DOOR SHALL BE FITTED WITH SCHUCO ASS80 OR APPROVED EQUIVALENT LIFT AND SLIDE DOOR SYSTEM WITH SCHUCO ASS50 OR APPROVED EQUIVALENT IRONMONGERY W/ M/N. 5 LOCKING POINT, KEYS AND DOOR STOPPER.
6. BI-FOLDING DOOR SHALL BE FITTED WITH SCHUCO ASS70FD OR APPROVED EQUIVALENT BI-FOLDING DOOR SYSTEM WITH SCHUCO ASS70FD OR APPROVED EQUIVALENT IRONMONGERY.
7. ALUMINIUM LOUVRE SHALL BE FITTED WITH 3MM THK. ALUMINUM BACK PANEL W/ COLOR MATCHING LOUVRE BLADE.
8. INTERNAL FINISHES REFER TO INTERIOR DESIGNER'S DRAWINGS.
9. GLASS TYPE AND THICKNESS REFER TO WINDOW SCHEDULE.

LEGEND:

GL-XX MATERIAL CODE REFER DRAWING NO. A2-01-01

SIDE HUNG OPERABLE SASH

TOP HUNG OPERABLE SASH

WIT-XXX-R TO BE HANDED OF WIT-XXX

TENDER DRAWING

DRAWING TITLE :

TOWER WINDOW SCHEDULE (6)

DATE : 28.2.2018	PAPER SIZE : A1
SCALE : 1:25	DRAWN :
PROJECT NO. :	
DWG. NO. :	

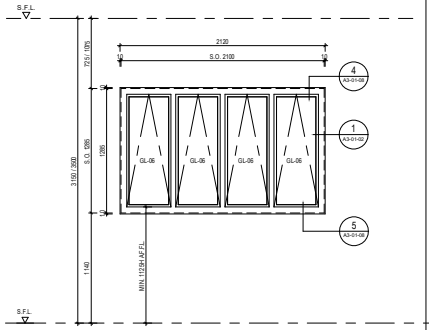

WPT-401 WPT-401-R

45 MM EXTRUDED ALUMINIUM SECTION [AL-03] FOR WINDOW

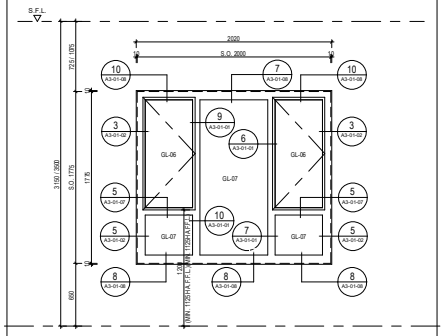

WPT-601 WPT-601-R

70 MM EXTRUDED ALUMINIUM SECTION [AL-03] FOR WINDOW

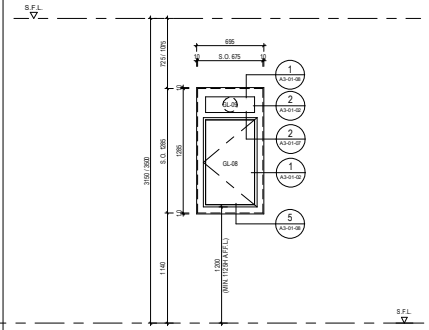

WPT-B-201 WPT-B-201-R

45 MM EXTRUDED ALUMINIUM SECTION [AL-03] FOR WINDOW

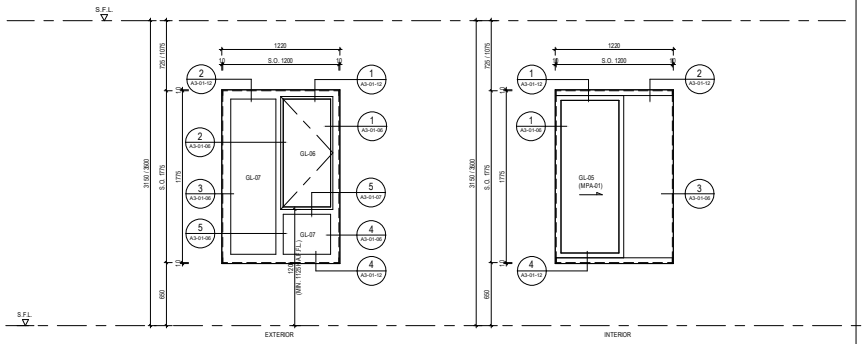

WPT-A-301 WPT-A-301-R

70 MM EXTRUDED ALUMINIUM SECTION [AL-03] FOR WINDOW

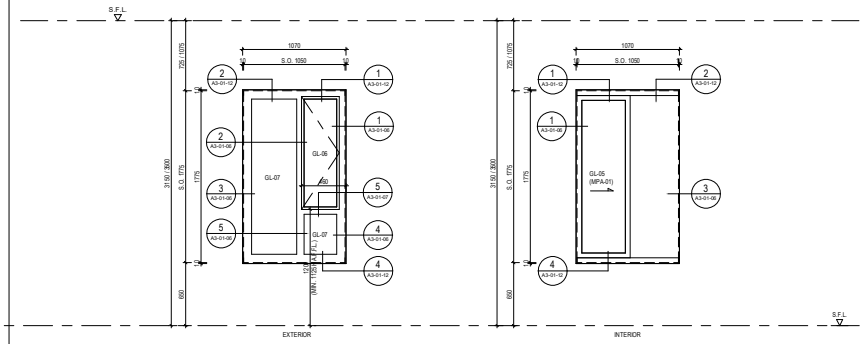

WPT-A-302 WPT-A-302-R

70 MM EXTRUDED ALUMINIUM SECTION [AL-03] FOR WINDOW

B.D. REF. : BD 2/9124/14

F.S.D. REF. : FP 8/31008

REVISIONS :

NO.	DESCRIPTION	DATE

NOTES:

1. EXACT DIMENSION SHALL BE VERIFIED ON SITE.
2. TOP HUNG OPERABLE SASH SHALL BE FITTED WITH MULTI POINT LOCK SYSTEM, MIN. 4 LOCKING POINTS, ONE PAIR OF STAINLESS STEEL FOUR BAR HINGE AND ONE PAIR OF DETACHABLE OPENING LIMITING DEVICE.
3. SIDE HUNG OPERABLE SASH SHALL BE FITTED WITH MULTI-POINT LOCK SYSTEM AND MIN. 3 LOCKING POINTS, CONCEALED KEEPERS AND ONE PAIR OF STAINLESS STEEL FOUR BAR HINGE.
4. SIDE HUNG FRENCH DOOR SHALL BE FITTED WITH MULTI POINT LOCK SYSTEM, MIN. 3 LOCKING POINTS & CONCEALED KEEPERS, KEYS, MIN. 3NOS. ALUMINUM HINGES, DOOR CATCH AND S.S. OVERHEAD FRICTION LIMITER AT TOP.
5. SLIDING DOOR SHALL BE FITTED WITH SCHUCO ASS50 OR APPROVED EQUIVALENT LIFT AND SLIDE DOOR SYSTEM WITH SCHUCO ASS50 OR APPROVED EQUIVALENT IRONMONGERY W/ MIN. 6 LOCKING POINT, KEYS AND DOOR STOPPER.
6. BI-FOLDING DOOR SHALL BE FITTED WITH SCHUCO ASS70FD OR APPROVED EQUIVALENT BI-FOLDING DOOR SYSTEM WITH SCHUCO ASS70FD OR APPROVED EQUIVALENT IRONMONGERY.
7. ALUMINUM LOUVRE SHALL BE FITTED WITH 3MM THK. ALUMINUM BACK PANEL W/ COLOR MATCHING LOUVRE BLADE.
8. INTERNAL FINISHES REFER TO INTERIOR DESIGNER'S DRAWINGS.
9. GLASS TYPE AND THICKNESS REFER TO WINDOW SCHEDULE.

LEGEND:

GL-XX MATERIAL CODE REFER DRAWING NO. A2-01-01

SIDE HUNG OPERABLE SASH

TOP HUNG OPERABLE SASH

WIT-XXX-R TO BE HANDED OF WIT-XXX

TENDER DRAWING

DRAWING TITLE :

TOWER WINDOW SCHEDULE (7)

DATE : 28.2.2018	PAPER SIZE : A1
SCALE : 1:25	DRAWN :
PROJECT NO. :	
DWG. NO. :	

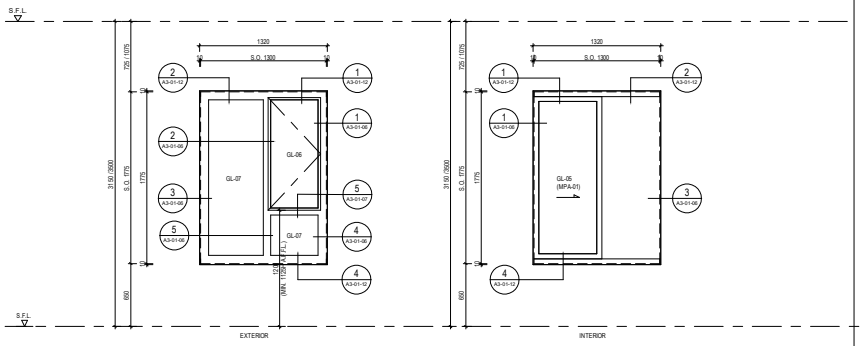

WPT-A-303 WPT-A-303-R

70 MM EXTRUDED ALUMINUM SECTION | AL-03 | FOR WINDOW

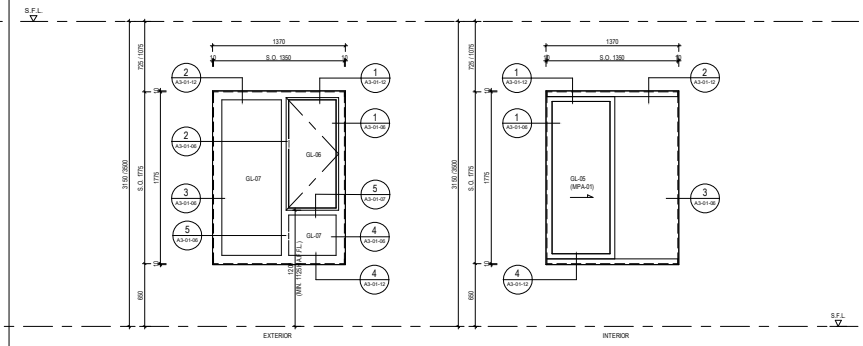

WPT-A-304 WPT-A-304-R

70 MM EXTRUDED ALUMINUM SECTION | AL-03 | FOR WINDOW

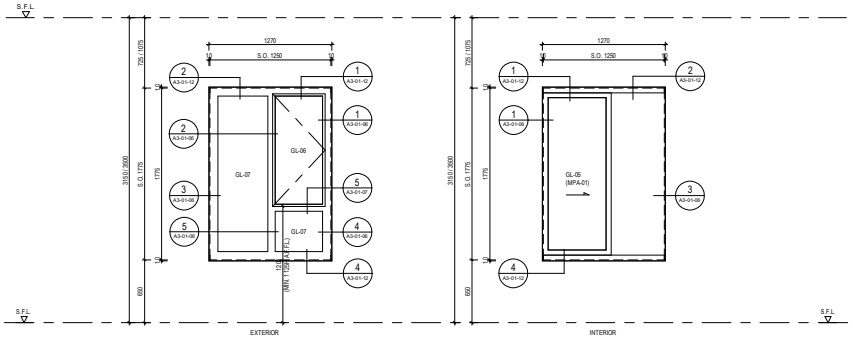

WPT-A-305 WPT-A-305-R

70 MM EXTRUDED ALUMINUM SECTION | AL-03 | FOR WINDOW

B.D. REF. : BD 2/9124/14

F.S.D. REF. : FP 8/31008

REVISIONS :

NO.	DESCRIPTION	DATE

NOTES:

1. EXACT DIMENSION SHALL BE VERIFIED ON SITE.
2. TOP HUNG OPERABLE SASH SHALL BE FITTED WITH MULTI POINT LOCK SYSTEM, MIN. 4 LOCKING POINTS, ONE PAIR OF STAINLESS STEEL FOUR BAR HINGE AND ONE PAIR OF DETACHABLE OPENING LIMITING DEVICE.
3. SIDE HUNG OPERABLE SASH SHALL BE FITTED WITH MULTI-POINT LOCK SYSTEM AND MIN. 3 LOCKING POINTS, CONCEALED KEEPERS AND ONE PAIR OF STAINLESS STEEL FOUR BAR HINGE.
4. SIDE HUNG FRENCH DOOR SHALL BE FITTED WITH MULTI POINT LOCK SYSTEM, MIN. 3 LOCKING POINTS & CONCEALED KEEPERS, KEYS, MIN. 3NOS. ALUMINUM HINGES, DOOR CATCH AND S.S. OVERHEAD FRICTION LIMITER AT TOP.
5. SLIDING DOOR SHALL BE FITTED WITH SCHUCO ASS80 OR APPROVED EQUIVALENT LIFT AND SLIDE DOOR SYSTEM WITH SCHUCO ASS50 OR APPROVED EQUIVALENT IRONMONGERY W/ MIN. 6 LOCKING POINT, KEYS AND DOOR STOPPER.
6. BI-FOLDING DOOR SHALL BE FITTED WITH SCHUCO ASS70FD OR APPROVED EQUIVALENT BI-FOLDING DOOR SYSTEM WITH SCHUCO ASS70FD OR APPROVED EQUIVALENT IRONMONGERY.
7. ALUMINUM LOUVRE SHALL BE FITTED WITH 3MM THK. ALUMINUM BACK PANEL W/ COLOR MATCHING LOUVRE BLADE.
8. INTERNAL FINISHES REFER TO INTERIOR DESIGNER'S DRAWINGS.
9. GLASS TYPE AND THICKNESS REFER TO WINDOW SCHEDULE.

LEGEND:

GL-XX MATERIAL CODE REFER DRAWING NO. A2-01-01

SIDE HUNG OPERABLE SASH

TOP HUNG OPERABLE SASH

WIT-XXX-R TO BE HANDED OF WIT-XXX

TENDER DRAWING

DRAWING TITLE :

TOWER WINDOW SCHEDULE (8)

DATE : 28.2.2018	PAPER SIZE : A1
SCALE : 1:25	DRAWN :
PROJECT NO. :	
DWG. NO. :	